COOL BOOST SYSTEMS

ADVANCED DETONATION SUPPRESSION & FORCED INDUCTION COOLING

COOL BOOST WATER METHANOL SYSTEMS
SNS STAGE I V2 STATIC INJECTION
WIRING SCHEMATIC
GENERIC

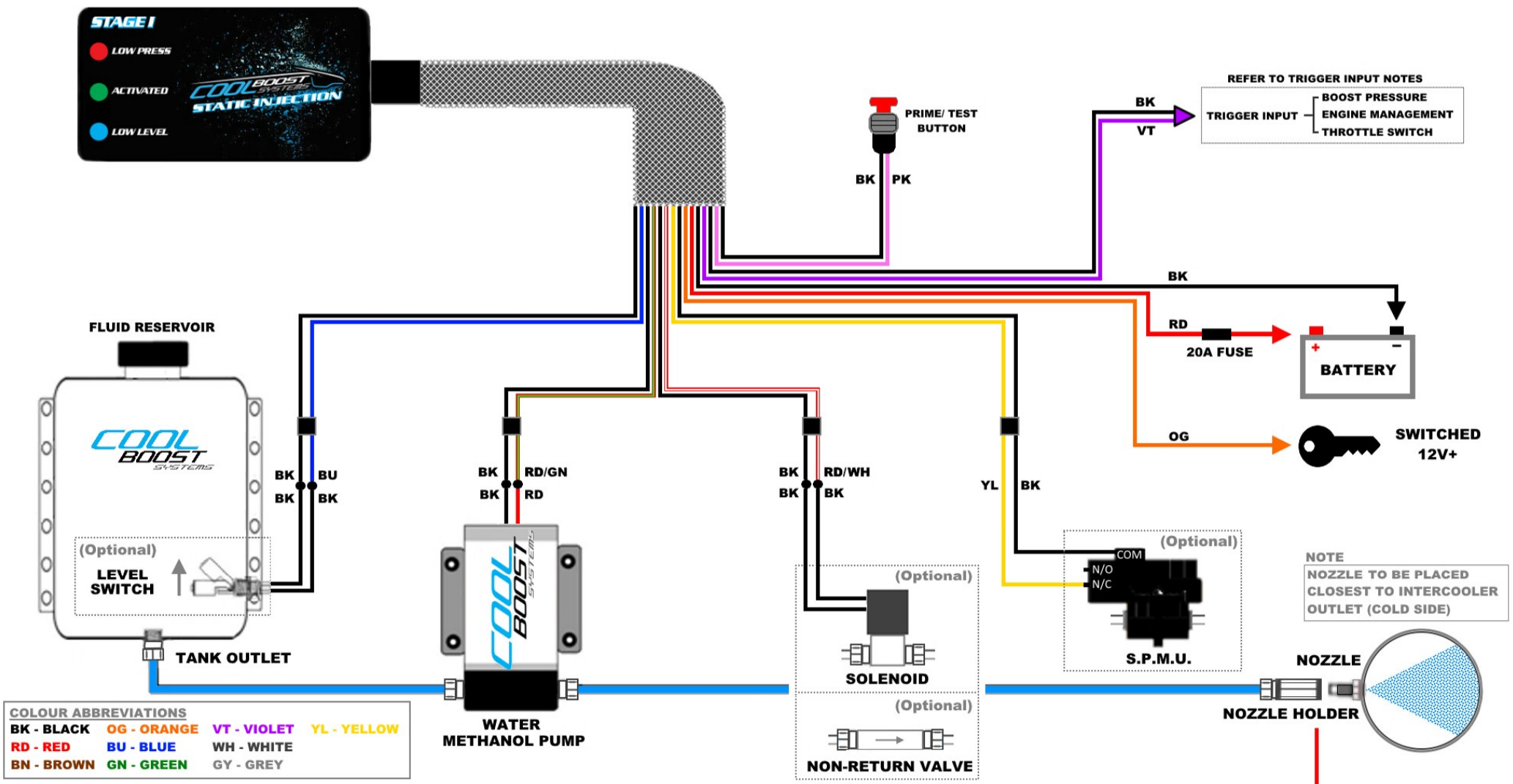

COLOUR ABBREVIATIONS

BK - BLACK	OG - ORANGE	VT - VIOLET	YL - YELLOW
RD - RED	BU - BLUE	WH - WHITE	
BN - BROWN	GN - GREEN	GY - GREY	

IMPORTANT INSTALLER INFORMATION

IF THE SYSTEM IS EQUIPPED WITH A SOLENOID, CONNECT THE SOLENOIDS WIRES TO THE PUMP WIRES
IF THE SYSTEM IS NOT EQUIPPED WITH A LEVEL SWITCH, INDIVIDUALLY TAPE UP AND ISOLATE THE BLUE & BLACK WIRES
IF THE SYSTEM IS NOT EQUIPPED WITH A SPMU, INDIVIDUALLY TAPE UP AND ISOLATE THE YELLOW AND BLACK WIRES
THE TANK LEVEL SWITCH MUST FLOAT UPWARDS IF UTILIZED AND BE HORIZONTAL WHEN EMPTY
THE PRIME BUTTON IS AN OVERIDE FOR THE SYSTEM ACTIVATION AND SHOULD PLACED IN THE INTERIOR OF THE VEHICLE

REV 2D